Operating instructions

RotaCut®

RCX-20G Inline

ENGINEERED TO WORK

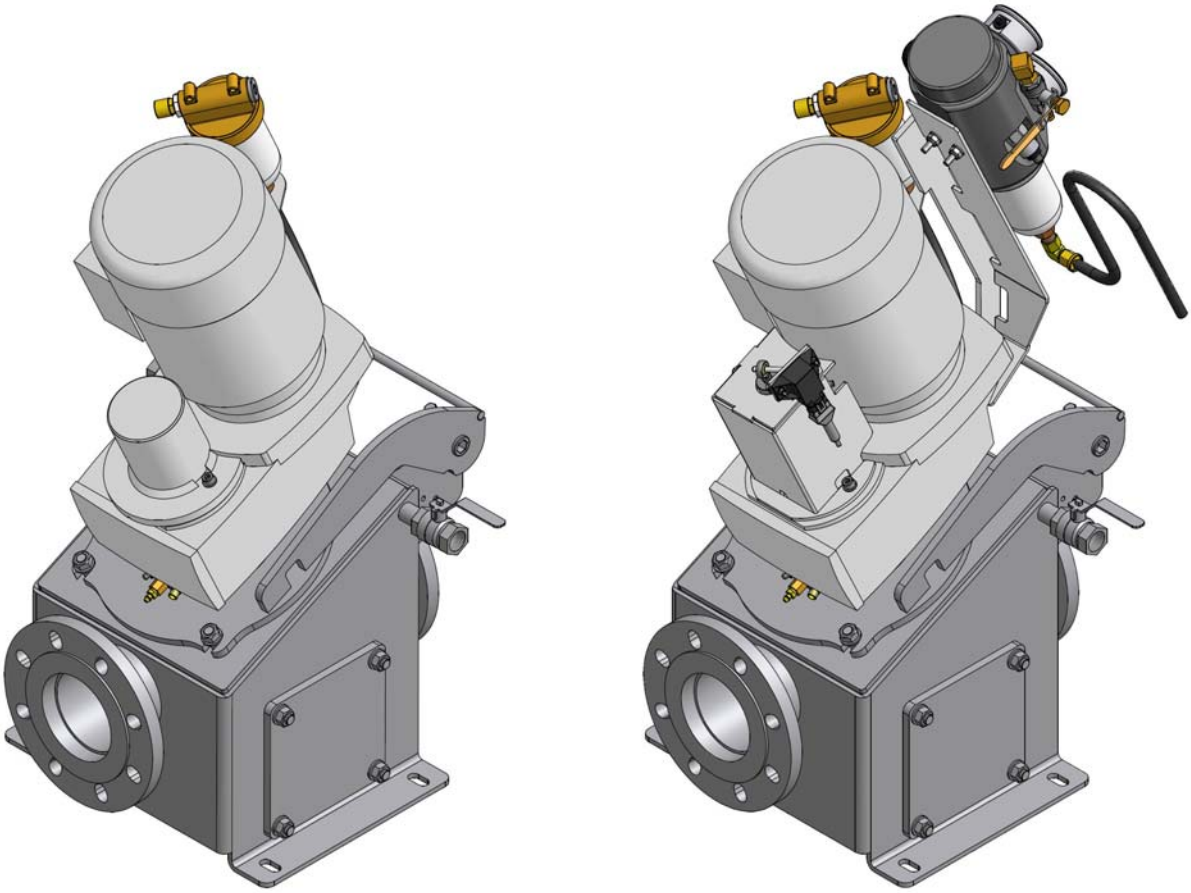

Original operating instructions

Issuer

Hugo Vogelsang
Maschinenbau GmbH
49632 Essen/Oldb.
Germany

+49 54 34 83 0
+49 54 34 83 10
info@vogelsang-gmbh.com
vogelsang.info

In the absence of express, written authorisation from the issuer, the reproduction or partial reproduction of this document in any form is prohibited.

We reserve the right to make technical modifications to the diagrams and information presented in this document in the event that such modifications become necessary for the enhancement of the machine.

© 2010 Hugo Vogelsang Maschinenbau GmbH

Registered trademarks of Vogelsang
Vogelsang, Vogelsang Logo, RotaCut, HiFlo, ACC, CFC and BioCrack are registered trademarks of Hugo Vogelsang Maschinenbau GmbH.

The registered trademarks are not always designated with a ® symbol in this document.

Contents

1 User information ... 4
1.1 Using the operating instructions ... 4
1.2 Warning signs, danger symbols, information ... 4

2 Intended purpose ... 5

3 Safety Notes ... 5
3.1 Opening the RotaCut ... 7
3.2 Warning and safety labels ... 8

4 Assembly ... 10
4.1 Transport ... 10
4.2 Connection to the pipe system ... 11
4.2.1 Installation ... 11
4.2.2 Direction of flow ... 12
4.3 Safety device safety switch ... 13
4.4 Electronic wear indicator for blades ... 14
4.4.1 Function and technical data of angle sensor ... 14
4.4.2 Adjusting the angle sensor ... 15
4.4.3 Angle sensor control unit ... 15
4.5 Notes on the control ... 16
4.6 Connection to the power supply ... 16
4.6.1 Connecting the geared motor ... 16
4.7 Installation/retrofitting: Automatic preloading unit ACC ... 17

5 Start-up ... 20
5.1 Check list before start-up ... 20

6 Maintenance ... 21
6.1 Check cutting blades - adjusting of preload ... 21
6.1.1 RotaCut with manual preloading (prelocking nut and rubber disc) ... 22
6.2 RotaCut with automatic preload (Automatic Cut Control (ACC)) ... 23
6.2.1 Adjusting preloading pressure at the pressure control valve ... 24
6.2.2 Adjusting the pressure control switch ... 25
6.2.3 Check oil level in the pressure transmission unit ... 26
6.3 Inspecting and replacing the blades and the cutting screen ... 26
6.3.1 Disassembling the blade rotor (RotaCut with manual preload) ... 26
6.3.2 Disassembling the blade rotor (RotaCut with automatic preload) ... 27
6.3.3 Replacing the blades ... 27
6.3.4 Replacing the cutting screen ... 29
6.3.5 Assembling the blade rotor (RotaCut with manual preload) ... 30
6.3.6 Assembly of the blade rotor (RotaCut with automatic preload) ... 30
6.4 Change and check quenching fluid ... 31
6.5 Control foreign matter ... 32
6.6 Sealing check ... 32
6.7 Checking for wear and corrosion ... 32
6.8 Changing of gearbox oil ... 32
6.9 Oils and lubricants ... 33

7 Repair ... 35
7.1 Conversion and spare parts ... 35
7.2 Change of seal ... 36
7.2.1 Remove the preload device (RotaCut with manual preload) ... 36
7.2.2 Remove the preload device (RotaCut with ACC) ... 37
7.2.3 Sealing package replacement ... 38

8 Service Instructions In Tabular Form ... 40

9 Service Plan ... 41

10 Trouble-shooting ... 42

11 Specifications ... 43

12 Declaration of Installation ... 44

Dear customer,

in every one of our products, you will see the entirety of our competence and our power of innovation at work. Each product is developed and built so that you can work more successfully.
We call it quite simply: ENGINEERED TO WORK

If you want to know more about our company or put forward requests or suggestions, a wealth of information can be found at www.vogelsang.info

1 User information

1.1 Using the operating instructions

These instructions contain all necessary information concerning the operating elements, handling, start-up and maintenance and repair work, as well as all of the relevant technical data.
The operating instructions are a component of the machine.
Please therefore keep the instructions ready to hand to ensure easy access to the necessary information at all times.
Read the operating instructions thoroughly. All of the points presented in these instructions must be understood and observed by those persons responsible for the installation, operation, maintenance and repair of the machine.
Vogelsang does not accept any liability for damage resulting from failure to comply with these maintenance and operating instructions.

1.2 Warning signs, danger symbols, information

Legend of symbols

Warning advisory

A warning advisory warns you of possible dangers to the health and life of yourself and other people resulting from the handling and operation of this machine.

Warning advisory

This warning advisory warns you of possible dangers through electric shock.

This warning advisory warns you of possible dangers for your machine.

This information provides you with additional advice and tips.

2 Intended purpose

The Vogelsang RotaCut is intended for cutting up fibrous materials, macerating solid matter and separating foreign objects in pumpable fluids (medium).
The medium can have the following properties:

- Temperature: 0°C to max. 80°C
- pH: <7 (acidic), =7 (neutral) or >7 (alkaline)

The use of the RotaCut as a shredder for macerating solid matter or as a mixer for mixing fluids and/or solid matter, as well as any other use, is contrary to the intended purpose. Vogelsang is not liable for any damage resulting from incorrect use.

A RotaCut without a pot or without a safety device is an incomplete machine. The installation instructions are provided in the chapter "Installation".
The declaration of installation is part of these operating instructions.

The RotaCuts described in these operating instructions are not intended for use in potentially explosive atmospheres.

3 Safety Notes

Before putting into operation, carefully read and note the contents of the operating instructions and the safety information.

- The warning and safety labels fitted provide important information for safe operation.
- In the interests of your own safety, pay attention to these labels.
- The warning and safety labels must not be removed and must be replaced immediately if damaged or lost (see chapter "Warning and safety labels").

Risk of injury from rotating parts

- Start-up of the RotaCut can only be done once the suction and discharge pipes are connected. This ensures that access to the blades is not possible.
- Before performing any maintenance and repair work, switch off the drive and make sure that the drive cannot be unintentionally switched on again.

Skin and eye irritation caused by auxiliary materials, operating materials and macerating medium

Protective clothing (protective goggles, protective gloves) must be worn during all work involving possible contact with auxiliary materials, operating materials and macerating medium.
Before opening maintenance ports, covers, connectors etc., the system must be depressurised to prevent the medium from spraying out.

Risk of injury from rotating parts when the RotaCut is unintentionally started up

To prevent unintentional starting, the control system of the RotaCut must conform to **Performance Level "c“** or higher as per EN ISO 13849 (safety device). The safety device must be connected and regularly checked by qualified technical personnel, especially before start-up and after maintenance and repair work.

Risk of injury from electric shock when using RotaCut with an electrical drive

Only qualified electricians may connect the device to the power supply.

Risk of injury from sharp cutting edges

Wear protective gloves when working in the danger area and be sure to prevent the blade rotor and blades from falling off.
Lock any movable parts, e.g. the blade rotor, before carrying out maintenance and repair work.

Risk of injury from bursting components and medium spraying out under high pressure

- The maximum operating pressure must not be exceeded (see chap. "Technical data").
- Fermentation may occur in closed pipes and/or in the RotaCut pot during periods of inactivity. The resulting gas can result in a large pressure increase that can damage the system and cause injury. To prevent the build-up of pressure, open the following components:
  - the slide valve of the RotaCut/system
  - the ball valve in the RotaCut cover (cutter head)
- Vent the RotaCut before rinsing.
- When the direction of flow of a positive displacement pump is changed, the suction side becomes the discharge side and must be protected against overpressure.

Risk of crushing caused by the RotaCut falling

- The unit may only be transported in a suspended position (see fig. "Transport aids") or when it is screwed on to a Euro pallet.
- Observe the transport recommendations, identified articulation points and directional arrows on the transport crates.

Thermal hazards (burns)

Gas accumulation in the system can cause the RotaCut and the connected pipes to become very hot.

- The contractor and the operator must ensure that gas cannot accumulate in the system (see chap. "Installation").
- The RotaCut must be vented before positive medium pressures are reached.
- Avoid dry running of the blades.

3.1 Opening the RotaCut

Attention! In the interest of safety, take note of the following warning advisories before opening the RotaCut cover (cutter head):

Risk of crushing caused by the RotaCut tilting or falling

- Ensure that the RotaCut is firmly connected to the floor or firmly installed in the pipe.

Risk of injury from rotating parts

- Switch off the drive and make sure that the drive cannot be switched on again while the RotaCut is open.
- Also set the main switch to "0".
- Ensure that the installed safety switch (part no. SMD0013) is connected and adjusted in such a way, that the RotaCut ceases operation immediately when the cover is opened, see chap. "Safety device safety switch".

Skin and eye irritation caused by macerating medium

To prevent the medium from spraying out,

- depressurise the system
- carefully open the ball valve on the cutter head

Risk of injury from sharp cutting edges

Wear protective gloves when working in the danger area and be sure to prevent the blade rotor and blades from falling off.
Lock any movable parts, e.g. the blade rotor, before carrying out maintenance and repair work.

3.2 Warning and safety labels

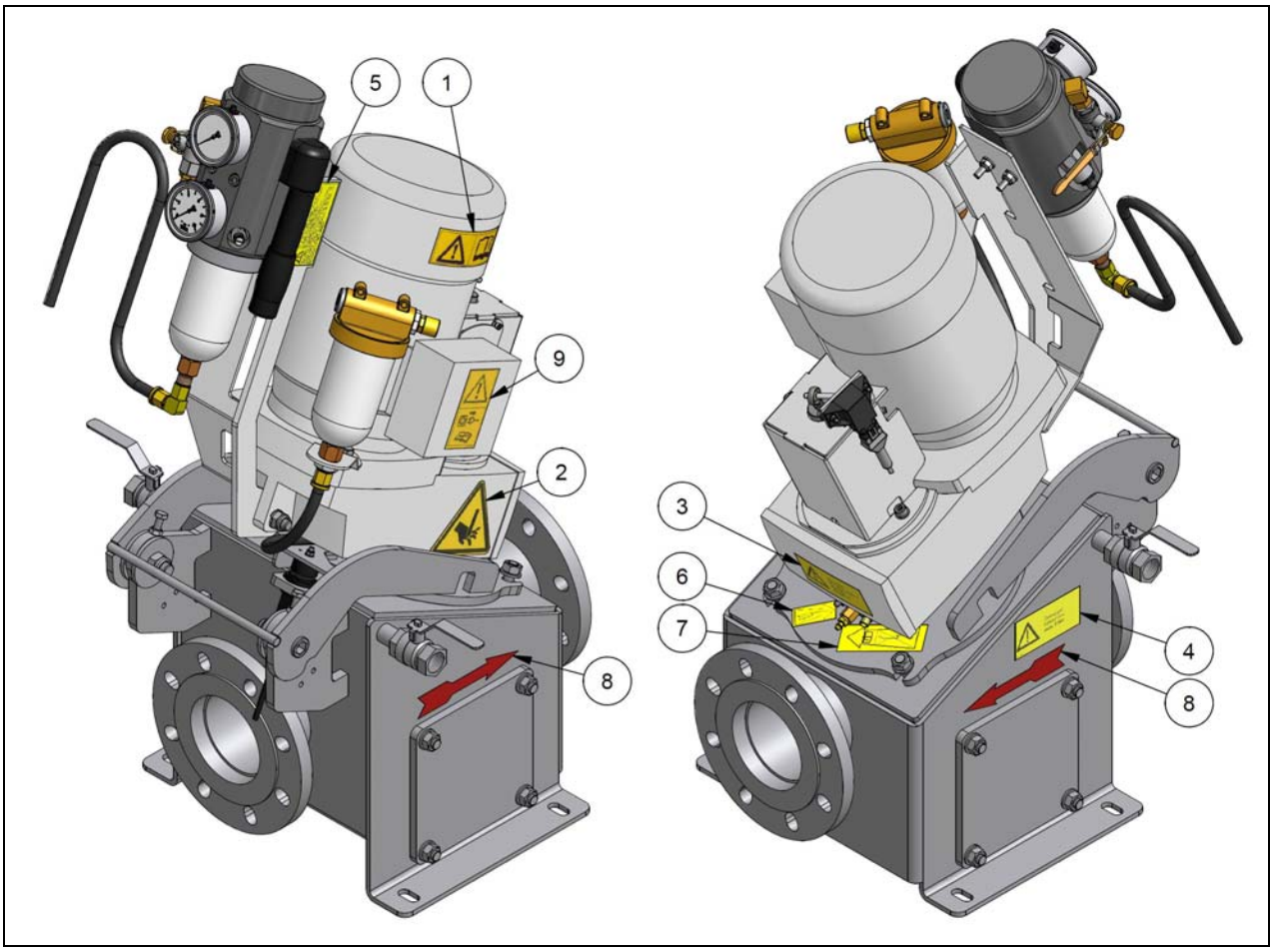

View, inlet View, outlet

Fig. 1: Position of the warning and safety stickers

Pos.	Sticker	Part-no.	Meaning
1		VAU.133	Before putting the machine into operation, read the maintenance and operating instructions.
2		VAU.014	Beware of injuries to your hands!
3		VAU.013	See sticker
4		VAU.144	See sticker
5	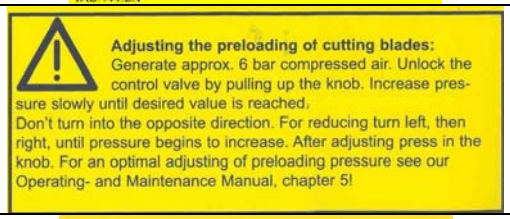	VAU.140	See sticker (for a RotaCut with ACC)
6	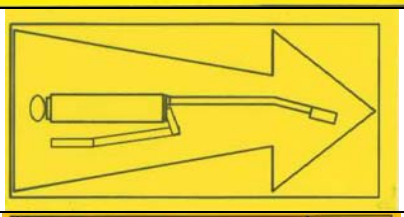	VAU.131	lubricate here
7	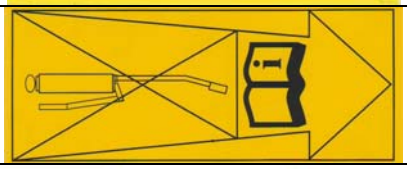	VAU.130	do not lubricate here, read WBV
8		VAU.109	Direction of flow
9		VAU.012	Pull plug, read operating instructions

4 Assembly

4.1 Transport

Risk of crushing caused by the RotaCut falling

- The unit may only be transported in a suspended position (see fig. "Transport aids") or when it is screwed on to a Euro pallet.
- For suspended transport of the RotaCut, attach the round slings as shown in fig. “Transport aids”.

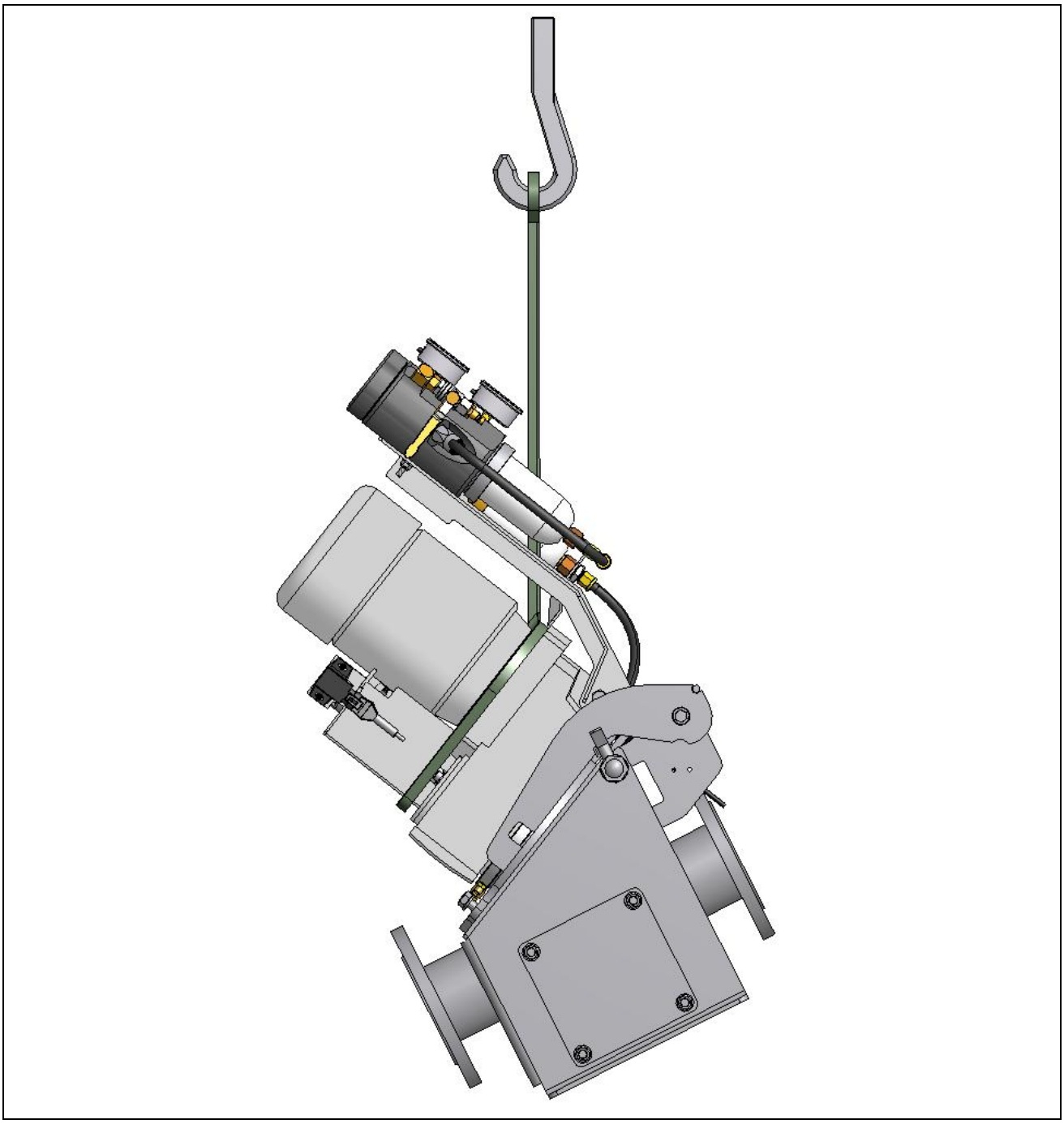

Fig. 2: Transport aids

4.2 Connection to the pipe system

4.2.1 Installation

The RotaCut is usually installed on the suction side. When installing on the pressure side, observe the maximum pressure stated in the chapter “Technical data”.

Risk of crushing caused by the RotaCut tilting or falling

Ensure that the RotaCut is firmly connected to the floor or firmly installed in the pipe.

Thermal hazard (burns) due to incorrect installation in the pipe

Gas accumulation in the system can cause the RotaCut and the connected pipes to become very hot.

- Especially in the case of positive medium pressures, the pipe on the outlet side of the RotaCut must be installed so that it inclines upwards.
- The RotaCut must be vented before positive medium pressures are reached.
- Avoid dry running of the blades.

Skin and eye irritation caused by leakages of auxiliary materials, operating materials and macerating medium as a result of faulty seals.

- The sealing materials must be compatible with the medium.
- Protective clothing (protective goggles, protective gloves) must be worn during all work involving possible contact with auxiliary materials, operating materials and macerating medium.
- Before opening maintenance ports, covers, connectors etc. the system must be depressurised to prevent the medium from spraying out.

Risk of vibrations or breakage as a result of misalignment

The connectors must be mounted free from stress. In other words, the connectors have to be precisely one in front of the other, even when they are not screwed into place.

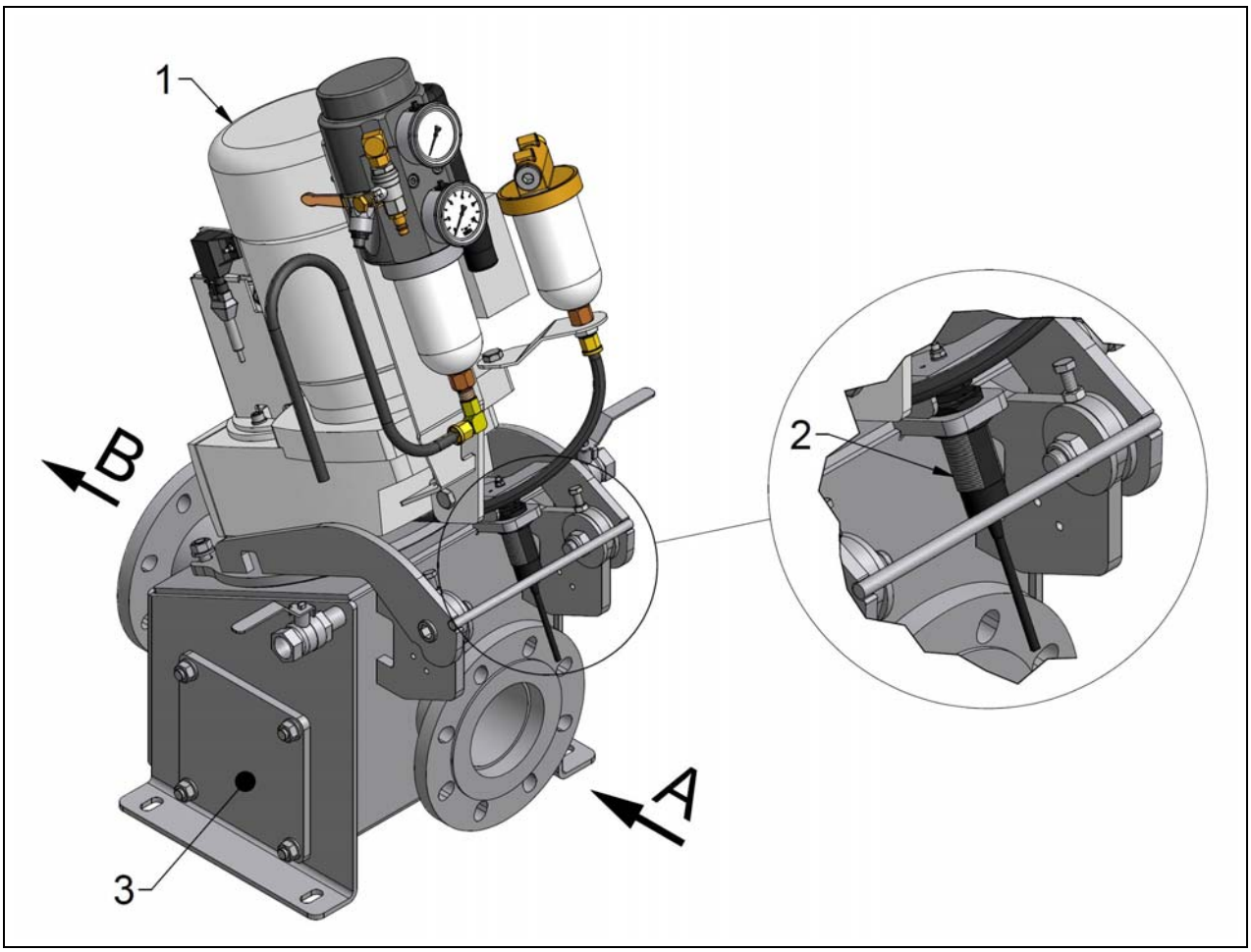

Fig. 3: Installation and direction of flow

1	Geared motor	**A**	Inlet
2	Safety switch	**B**	Discharge
3	Cleaning port		

4.2.2 Direction of flow

– During installation, note the red directional arrows on the RotaCut pot which indicate the direction of flow.

4.3 Safety device safety switch

Risk of injury from rotating parts when the RotaCut is unintentionally started up

To prevent unintentional starting, the control system of the RotaCut must conform to **Performance Level "c"** or higher as per EN ISO 13849 (safety device). The safety device must be connected and regularly checked by qualified technical personnel, especially before start-up and after maintenance and repair work.

- The installed safety switch (part. no. SMD0013, PL=d) must be connected and adjusted in such a way that when the cover is opened, the RotaCut ceases operation immediately (see fig. "Safety switch – schematic diagram").
- The RotaCut may only be restarted via acknowledgement of a fault or via a restart if the cover is closed, and must be safeguarded by the connected control system.
- The RotaCut must not be put into operation if the safety switch is not working properly.

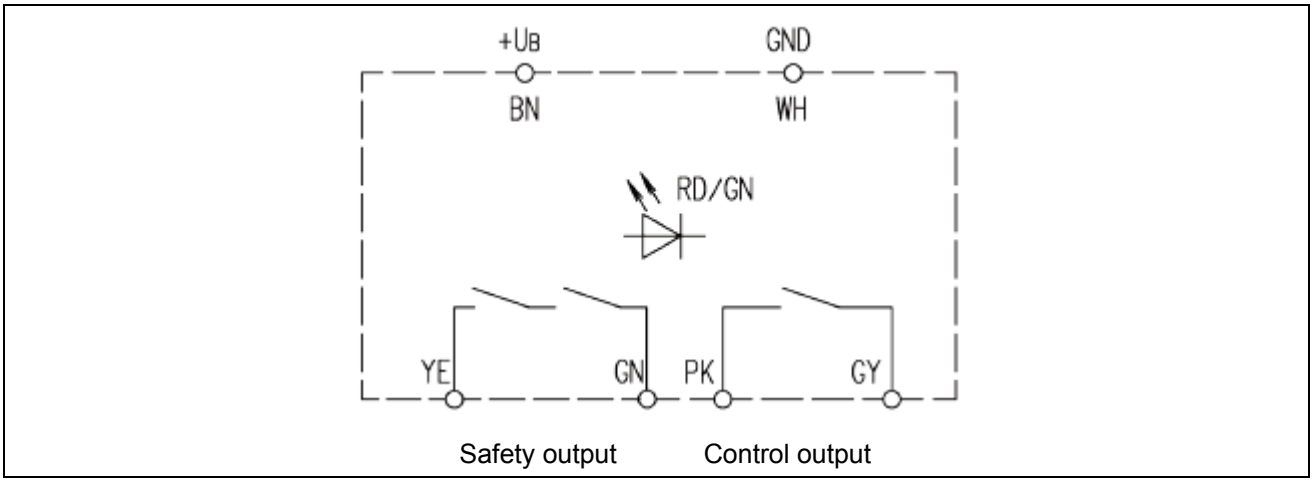

Fig. 4: Safety switch – schematic diagram of switch in idle condition, sensor not activated

GN	operational de-energized	
GN	energized	blinking
RD/GN	wrong energized	blinking
RD	fatal error	blinking

4.4 Electronic wear indicator for blades

4.4.1 Function and technical data of angle sensor

The angle sensor **1** on the ACC protective cover **2** is used as a wear indicator for the blades.
Blade wear causes a continual linear motion of the pre-tensioning parts. The swivel head **5** records this linear motion and passes it on as a rotary motion to the angle sensor via a lever. The current position of the blade rotor, and thus the wear rate of the blades, can be retrieved via the rotary motion within the angle measurement range of 30°.
The output signal of the angle sensor displays the wear rate of the blades:
If the output signal of the angle sensor is 5 mA, the wear rate is 0 % (blades worn).
If the outpout signal is 18 mA, the wear rate should show 100% (blades new).

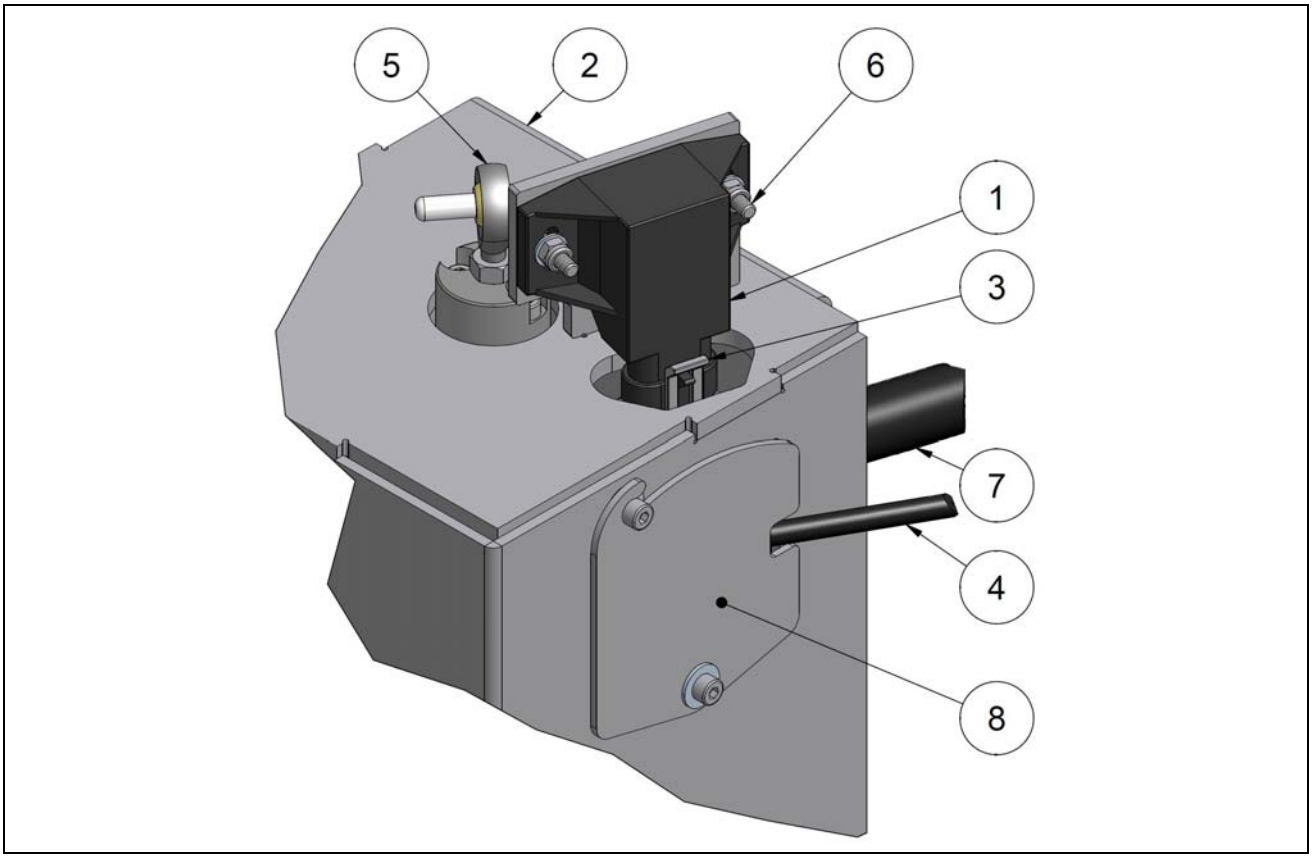

Fig. 5: Angle sensor on the ACC protective cover

1	Angle sensor	**5**	Swivel head
2	ACC protective cover	**6**	Adjustment screws
3	3-PIN AMP plug	**7**	Oil pipe
4	Connection cable	**8**	Maintenance port

Technical data of angle sensor

Angle measurement range:	30 °
Operating voltage:	10…30 V DC
Output signal:	4 - 20 mA
Power consumption:	12 V -> 18 mA
Resolution:	0.1 °
Temperature range:	-40…+85°C
Protection class:	IP 67

Circuit diagram for plug pos. 3

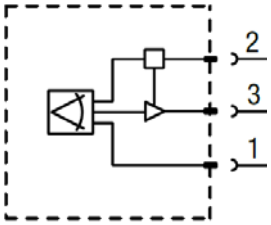

2 brown
3 black
1 blue

4.4.2 Adjusting the angle sensor

1. Remove the blade from the blade rotor.
2. Using the pressure regulator on the pressure transmission unit, set the preloading pressure low enough so that the blade rotor stops just before the cutting screen on its mechanical stop (→ position for "Blades worn", wear rate 0 %).
3. Adjust the angle sensor in this position for "Blades worn":
   - Slightly loosen the adjustment screws **6** (see Fig. "Angle sensor on the ACC protective cover") so that the angle sensor can be turned to the left and right
   - Set the output signal to 4.5 mA.
   - Tigthen the adjustment screws.
4. Install the blades → wear indicator is ready for operation.

Angle sensor settings

- The angle sensor comes already adjusted.
- If the blades are changed, the angle sensor does not have to be readjusted.

4.4.3 Angle sensor control unit

The Vogelsang RotaCut control unit (Performance Control Unit (PCU) RotaCut) displays the analog output signal (4-20mA) of the angle sensor as a percentage of blade wear. In this way the current wear rate can be retrieved at any time. Two different wear limits can be set via the parameters of the control unit. Each limit triggers a warning message.

Setting control unit parameters

- The control parameters of the angle sensor are set at the factory.
- When the blades are changed, the parameters of the control unit do not have to be reset.

Warning message for low blade height
This warning message informs that user that blades will soon be worn out.
The wear limit should be set so that there is enough time to order wear parts (factory setting is 20%).
When the defined percentage is reached, a warning light illuminates and the control unit display flashes, displaying the warning message "Low blade height".

Warning message for worn blades
The switch-off point of the RotaCut due to worn blades can be defined with this warning message.
For the RotaCut to switch off, the defined value for the wear limit must be ≥ 0 % (factory setting: 0%).
When the defined percentage is reached, the RotaCut stops and the control unit display flashes, displaying the warning message "Blades worn".
If the value is set to **negative**percentages, the switch-off function and the warning message are not triggered and the blade rotor will stop at its mechanical stop.

4.5 Notes on the control

Control system: Performance Control Unit (PCU)

We recommend the implementation of our control system that is specially designed for use with the RotaCut, in order to provide optimal effectiveness and service life of the RotaCut. All connections that are required for connecting the RotaCut to a control system are readily available.
If a new control system is developed by a switchgear manufacturer, the following points must be observed:

- The control system must at least fulfil PL "c" in accordance with EN ISO 13849.
- AC4 contactors should be used.
- Soft starters or variable frequency drives must be suitable for high starting currents and at least 8 starts within a minute. Therefore, oversized devices should be used for heavy starting.
- Please contact us with regards to the correct programming of the control system.

4.6 Connection to the power supply

4.6.1 Connecting the geared motor

The geared motor can only be connected to the energy supply **after** it has been installed in the pipe.

Risk of injury from electric shock when using RotaCut with an electrical drive

Only qualified electricians may connect the device to the power supply.

Connecting the geared motor

Before connecting the geared motor

- check that the power supply is correct for the motor.
- check that the wiring and fuse protection are adequately dimensioned to cope with multiple changes of direction of rotation and possible peak loads over short periods of time.
- be sure to follow the cable layout diagram on the inside of the motor terminal box cover. Normally the RotaCut is operated without a star-delta connection, i.e., directly.
- note that the PTC sensor of the geared motor must be connected to the terminals provided on the RotaCut control, to a PTC actuation unit or to a variable-frequency drive with a PTC input (each available as an option).
- install a repair switch near to the machine (recommendation).

Before start-up or long-term storage

- remove the seal in the bleed screw (if present) in order to prevent excessive pressure build-up in the gearbox and thus leaks (see the accompanying documentation "Operating and maintenance instructions – geared motor").

4.7 Installation/retrofitting: Automatic preloading unit ACC

Risk of injury from rotating parts

- Switch off the drive and make sure that the drive cannot be switched on again while the RotaCut is open.
- Also set the main switch to "0".
- Ensure that the installed safety switch (part no. SMD0013) is connected and adjusted in such a way, that the RotaCut ceases operation immediately when the cover is opened, see chap. "Safety device safety switch".

Risk of injury from sharp cutting edges

Wear protective gloves when working in the danger area and be sure to prevent the blade rotor and blades from falling off.
Lock any movable parts, e.g. the blade rotor, before carrying out maintenance and repair work.

(see Fig. "RotaCut RCX-20G cutter head with ACC")

1. Remove ACC protective cover (1) and the preload system (2) (rubber disks + steel disks + guide bushing).
2. Open the RotaCut cover, block the blade rotor (3) and remove the slotted nut.
3. Mount the ACC cylinder and tighten it with 260 Nm.
4. Remove the blade rotor (3), rotor hood (11), blade and cutting screen (4).
5. Screw the pull rod (5) into the ACC piston and fix it using Weicon-Lock AN 302-60.
   - Insert the clean and oiled ACC piston with O-rings into the cylinder as far as possible; when doing so, pay attention to the correct alignment of the stud in the piston to the bore hole in the cylinder.
6. Clean and lubricate the drive shaft (10).
   - Change the O-ring (6) in the drive shaft (10).
   - Replace the ring gaskets, foam PU (7) in the bushing of the cutting screen supports.
7. Install a new cutting screen (4). Pay attention to clean contact surfaces!
   - Also refer to chapter "Replacing the cutting screen".
8. Install the blade rotor (3) with new blades, rotor hood (11) + O-ring (8).
   - Lubricate the rotor bushing (9) or the drive shaft (10) with grease.
   - Screw on the rotor hood (11) manually until it reaches the stop of the pull rod and turn it back if necessary, until the bore pattern corresponds to the blade rotor.
   - Screw in the hex socket head screws.
9. Install the pressure transmission unit and connect the oil pipe to the rotary lead-through of the ACC piston.

See also Fig. "Pressure transmission unit"

10. Fill the oil tank (1).
    - Generate approx. 5 bar air pressure in the compressed air tank (2).
    - Set the pressure in the oil tank to approx. 2 bar using the pressure regulator (4).
    - Turn the blade rotor (3) until the bleed screw (16) is on the top.
    - Loosen the bleed screw (16) until air comes out.
    - Retighten the bleed screw (16) when oil comes out blister-free.
      The oil tank (1) should still be at least half-full, discharge the pressure if necessary and refill oil.
    - Pressurise compressed air tank (2) with approx. 7 - 10 bar of compressed air.
    - Adjust preload pressure (see chapter "Adjusting preload pressure at the pressure control valve").
11. Install the ACC protective cover (1) with angle sensor and adjust the angle sensor (see chapter "Electronic wear indicator for blades").

see also Fig. "Replacing the sealing package"

12. After the installation is complete, lubricate the grease nipple (29) till grease comes out again at the check valve (32).

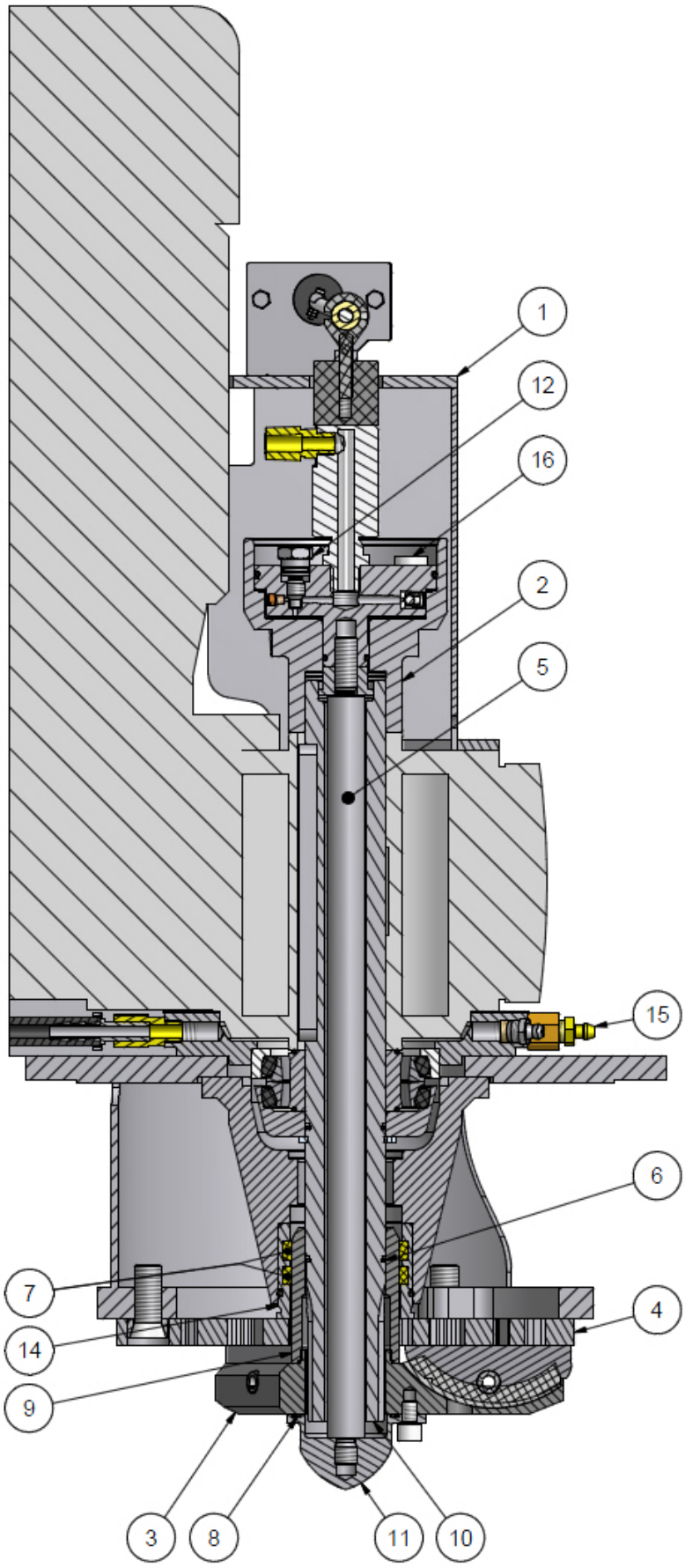

1	ACC protective cover
2	ACC tensioning system
3	Blade rotor
4	Cutting screen
5	Pull rod
6	O-ring (40 x 2)
7	Ring gasket, foam PU
8	O-ring (cover) 31 x 1
9	Rotor bushing
10	Drive shaft
11	Rotor hood
12	Release screw
14	Bushing gap seal
15	Valve (for changing of quenching fluid)
16	Bleed screw

Fig. 6: RotaCut RCX-20G cutter head with ACC

5 Start-up

- The RotaCut must only be started if the cover is closed and, in the event that an ACC is installed, if the compressed air tank of the pressure transmission unit is pressurised with at least 5 bar of compressed air (7-10 bar is recommended). If the pressure drops to 3.5 bar, it is switched off.
- The RotaCut should be operated using the VOGELSANG RotaCut control system. This system can be adapted to a particular case of use and significantly increases the range of applications. The effectiveness of the RotaCut and the service life of the wear parts (automatic sharpening of the blades) are improved by time and load-controlled reversing and control of the pumping. The control system can be retrofitted to existing equipment and can also be used to control pumps.
- Under very light operating conditions, you can also use a reversing switch. This enables the direction of rotation of the cutting unit to be changed from time to time. This in turn sharpens the blades and increases the service life. This solution should only be used in exceptional cases.

! Protection against cavitation

To protect the pump unit from cavitation, a pressure monitoring unit, for example a gauge, should be installed on the suction side, between the pump and the RotaCut. This means that the pump and the RotaCut can be switched off if the pressure is too low or too high. If the pressure is extremely low, check whether the suction pipe or RotaCut is clogged (see chap. "Safety notes").

! Protection against gearbox damage

While the machine is running, the direction of rotation must not be changed without a delay of about 2 seconds.

5.1 Check list before start-up

- ☐ Is the ACC pressure OK?
- ☐ Are the type of oil and oil level in the gearbox and buffer chamber of the RotaCut OK?
- ☐ Have all seal plugs been removed from the bleed screws?
- ☐ Have all safety devices been installed and their proper functioning ensured?
- ☐ Is the motor connected correctly to the power supply (see documents provided by the motor manufacturer)?
  - ☐ Star or delta connection, voltage, frequency (see name plate and inside of terminal box)?
  - ☐ Motor protection ensured, e.g., by a circuit breaker?
    - → For star-delta starting, if present, a short switching time should be set.
    - → For the soft starter, if present, a short start ramp should be set.
  - ☐ Is the variable-frequency drive/soft starter, if present, designed and configured correctly?
    - → Equipment should be suitable for heavy starting.
- ☐ Is the **emergency stop**device/repair switch easily accessible?
- ☐ Is the direction of flow OK? Check the pump's direction of rotation.
- ☐ Is the pipe system sealed and free of leakage?
- ☐ Are the drain cocks closed and is the RotaCut filled with fluid?
- ☐ Is the angle sensor for the electronic wear indicator correctly set?
- ☐ Have the parameters of the control unit been correctly set?

6 Maintenance

Risk of injury from rotating parts

- Switch off the drive and make sure that the drive cannot be switched on again while the RotaCut is open.
- Also set the main switch to "0".
- Ensure that the installed safety switch (part no. SMD0013) is connected and adjusted in such a way, that the RotaCut ceases operation immediately when the cover is opened, see chap. "Safety device safety switch".

Risk of injury from sharp cutting edges

Wear protective gloves when working in the danger area and be sure to prevent the blade rotor and blades from falling off.
Lock any movable parts, e.g. the blade rotor, before carrying out maintenance and repair work.

6.1 Check cutting blades - adjusting of preload

The blades themselves and the preload of the blades must be checked regularly.
Without sufficient preload, the blades are not sharpened. Rounded cutting edges lift the blades. This leads to uneven running as well as wear on the blade rotor and the shaft.
The time period between inspections varies and depends on the medium **to a high degree**.
The optimum time period is based on experience acquired by the operator under his own operating conditions. An abrasive medium should be assumed to begin with. Use the following table as a **rough** guide:

	Abrasive	Normal	Non-abrasive	
First inspection after	4	8	8	operating hours
Subsequent inspections after every	12	120	240	operating hours

The preload should be checked according to these intervals and corrected if necessary.

6.1.1 RotaCut with manual preloading (prelocking nut and rubber disc)

(see fig. "Adjusting preload of blades with preload locking nut and rubber disks")

- Turn the main switch to "0" and ensure that it cannot be turned on again during installation.
- Remove the protective cover (1).
- Undo the preload locking nut M10 (2).
- Remove the preload system (rubber disks + steel disks) (3).
- Check the soft running of the blade rotor (4) on the shaft and lubricate the toothing.
- Push the rotor on the shaft **until the blades lie at the cutting screen (5)**.
- Tighten the preload locking nut M10 till the blades are slightly pressed against the cutting screen.
- Rotate preload locking nut M10 by 3 - 5 more revolutions.
- Lubricate the grease nipple (6) till excess grease comes out at the pressure relief valve (7) (see chapter "Oils and Lubricants" for lubricant).
- Install the protective cover.

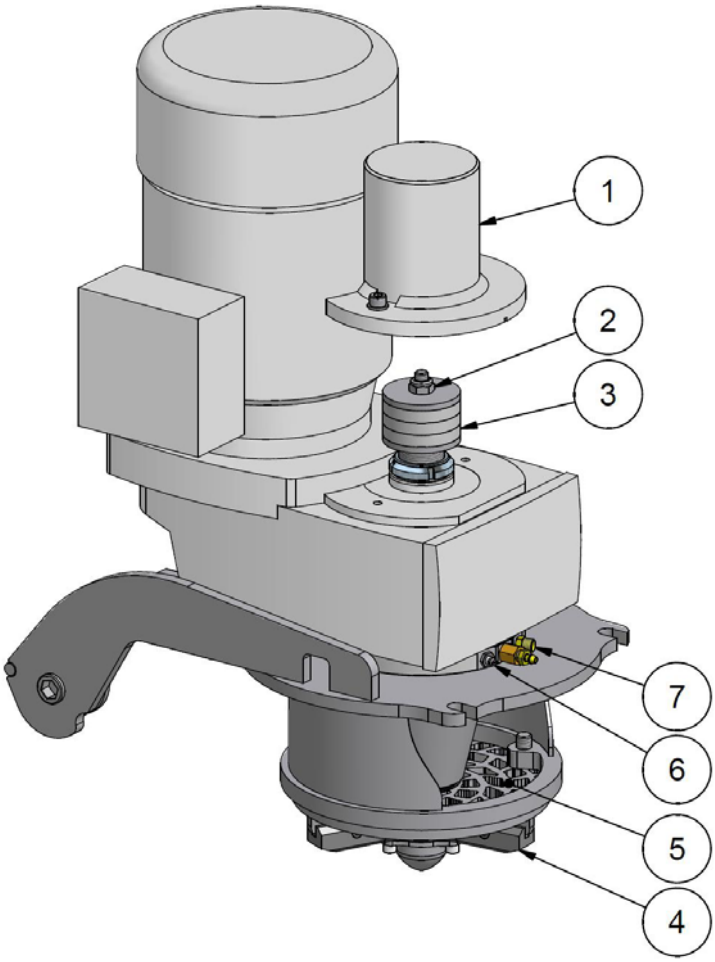

1	Protective cover
2	Preload locking nut
3	Preload system (rubber disks + steel disks + guide bushing)
7	Pressure relief valve
4	Blade rotor
5	Cutting screen
6	Grease nipple

Fig. 7: Adjusting preloading of blades with preload locking nut and rubber disks

6.2 RotaCut with automatic preload (Automatic Cut Control (ACC))

Automatic preloading (Automatic Cut Control (ACC))
A hydraulic cylinder (ACC cylinder as a component of the ACC unit) is screwed to the shaft of the RotaCut. Preload pressure is generated in the ACC cylinder via the pressure regulator of the pressure transmission unit (pos. 4 in Fig. "Pressure transmission unit"). By defining the preload pressure, the pressure force of the blade rotor on the cutting screen can be changed while the RotaCut is running.

Advantages:

- The preload pressure can be easily adapted to the medium.
- The load is automatically adjusted to compensate for wear. The preload pressure is kept constant over the entire area of wear.
- When the wear limit is reached, the RotaCut can be automatically switched off.

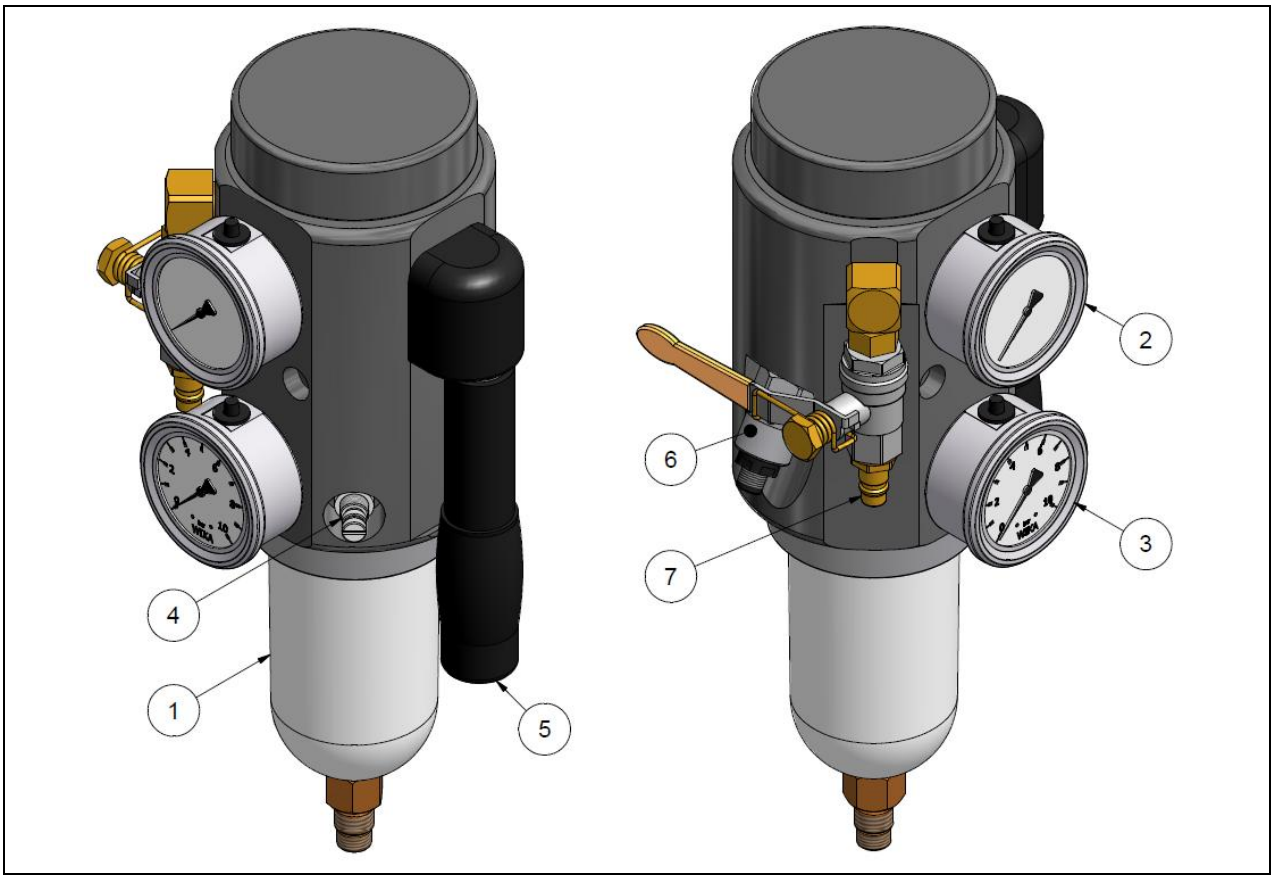

Fig. 8: Pressure transmission unit

1	Oil tank
2	Pressure gauge (16 bar for compressed air tank)
3	Pressure gauge (10 bar for oil tank) - preload pressure for blades
4	Pressure control valve (for adjusting the preload pressure in the oil tank)
5	Manual pump
6	Pressure switch
7	Compressed air plug nipple (for compressed air supply)

6.2.1 Adjusting preloading pressure at the pressure control valve

(see fig. "Pressure transmission unit")

- Produce a pressure of approx. 7-10 bar in the compressed air tank by means of the manual pump (5) or the compressed air supply (7).
- Set the **preload pressure** on the pressure control valve (4). The preload pressure depends on the macerating medium, the quantity and width of the blades, the cutting screen, the medium pressure, the speed and the RotaCut series. The pressure can lie between 0.5 and 8 bar.

Recommendation for setting the preload pressure for the first time:

- for light use, e.g., sewage plants: 2 bar
- for heavy use, e.g., biogas plants: 3 bar

! Optimising the service life of the cutting components

- An optimal setting of the preload pressure leads to an increased service life. If the preload is too low, the service life of the blade rotor and drive shaft are significantly reduced. The blades and the cutting screen lose their cutting effect.
  If the preload is too high, the wear on the blades and cutting screen is increased.
- A pressure that remains constant for the blades' entire service life is achieved as follows:
  starting at 0, slowly set the pressure to the desired value. Do not turn back in the opposite direction. If the pressure is to be reduced, reduce it by "turning to the left" (anticlockwise direction). Then "turn to the right" (clockwise direction) again, until the pressure in the oil tank begins to increase.

! Wear on the blades

Setting the preload pressure when the level of wear on the blades is too high:

1. Start with a high preload pressure
2. Reduce the preload pressure at increments of 0.5 bar
3. Operate the RotaCut at this reduced preload pressure for 10 hours
4. If after approx. 10 operating hours you notice noises, vibrations (uneven running), rounded cutting edges, clogging or accumulation of fibres on the blades and the cutting screen, the pressure is set too low.
5. Increase the pressure to the previous setting (0.5 bar increment) until quiet running and safe cutting are ensured again. This is how the correct preload pressure is found. Continue with step 2 if necessary.

6.2.2 Adjusting the pressure control switch

ACC-pressure switch = pos. 15.24 cm the fig. "Pressure transmission unit"

Technical data

Power:	max. 42 V
Rated current (resistive load):	max. 4 amperes
Switching capacity:	100 VA

Function and adjustment

See the Fig. "Adjusting the ACC-pressure switch".
The ACC-pressure switch (normally closed contact) is used to check the tightness of the ACC and the pressure transmission unit.

The switching point of the ACC-pressure switch is set to 3.5 bar at the factory and should

- Not be set higher unless the ACC pressure or medium pressure is above 4 bar
- Be 0.5 bar higher than the ACC or medium pressure

To check the switching point:

- Generate 5 bar compressed air pressure
- Connect continuity tester to contacts A and B
- Slowly release the pressure at the manual inflating valve:
  The continuity tester should show contact from 3.5 bar onwards.

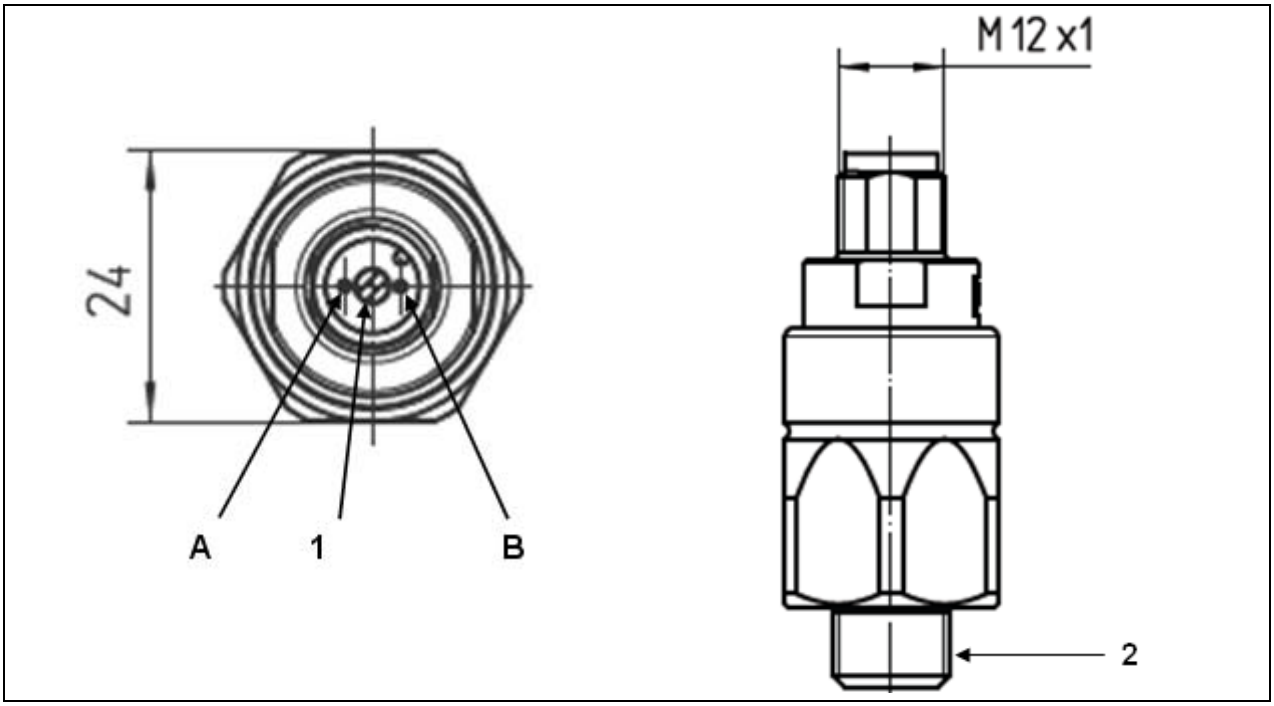

Fig. 9: Adjustment of the ACC pressure switch

A	Blue	**1**	Adjustment screw
B	Brown	**2**	Medium connection G1/4"

6.2.3 Check oil level in the pressure transmission unit

The pressure transmission unit, the buffer chamber and the preload cylinder are filled with biodegradable hydraulic oil.

The oil level must be checked (item 25.40 mm fig. "pressure transmission unit"):

- at start-up
- after 5 operating hours
- then every 100 operating hours

Indications of blade wear:
See chapter "Electronic wear indicator for blades"

6.3 Inspecting and replacing the blades and the cutting screen

Risk of injury from rotating parts

- Switch off the drive and make sure that the drive cannot be switched on again while the RotaCut is open.
- Also set the main switch to "0".
- Ensure that the installed safety switch (part no. SMD0013) is connected and adjusted in such a way, that the RotaCut ceases operation immediately when the cover is opened, see chap. "Safety device safety switch".

Risk of injury from sharp cutting edges

Wear protective gloves when working in the danger area and be sure to prevent the blade rotor and blades from falling off.
Lock any movable parts, e.g. the blade rotor, before carrying out maintenance and repair work.

Inspection

- After long breaks from operation, check the blades in the blade rotor for movability. Clean and lubricate the blades if necessary.
- If the wear rate is 0 %, see chapter "Electronic wear indicator for blades", the blades have to be replaced.

Change

6.3.1 Disassembling the blade rotor (RotaCut with manual preload)

1. Remove the protective cover and the preload locking nut (see chapter "RotaCut with manual preload").
2. Disassemble the rotor protection cover and the blade rotor, remove the o-ring (Pos. 8 in Fig. "RotaCut RCX-20G cutter head with ACC") near the rotor protection cover.

6.3.2 Disassembling the blade rotor (RotaCut with automatic preload)

1. Set the preload pressure to 0 bar via the pressure regulator (Pos. 4 in Fig "Pressure transmission unit").
2. Open the maintenance port of the ACC protective cover.
3. Undo the release screw (Pos. 1 in Fig. "Release screw") on the ACC piston by about 2 revolutions.
4. Pull the blade rotor slowly back to the end stop using a lever.
5. Disassemble the rotor protection cover and the blade rotor, remove the o-ring (Pos. 8 in Fig. "RotaCut RCX-20G cutter head with ACC") near the rotor protection cover.

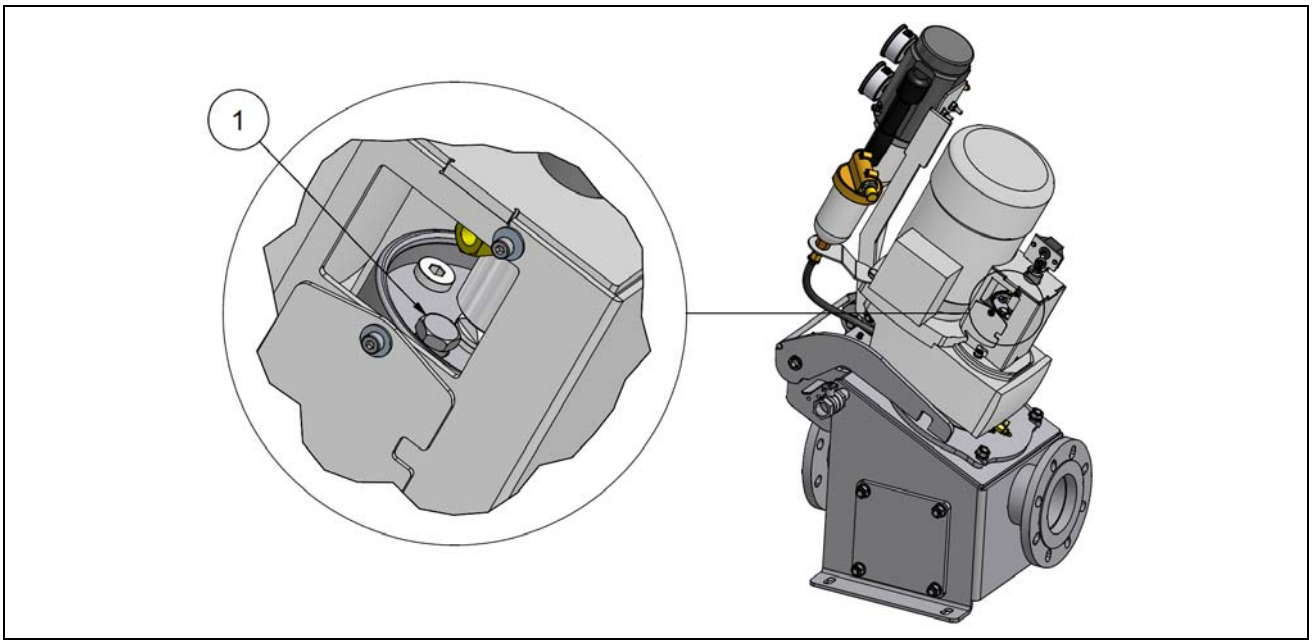

Fig. 10: Release screw (1)

6.3.3 Replacing the blades

1. Remove the blades.
2. Carefully clean and lubricate the seating surfaces of the blades.
3. Install new blades and spring pins and read the following notes and information.

Preparing the blade rotor for installation of the blades

Place the foam (polyethylene cord - item no. see spare parts list) at the end of the blade rotor slit and press the foam into the slot, for example, using a screwdriver.

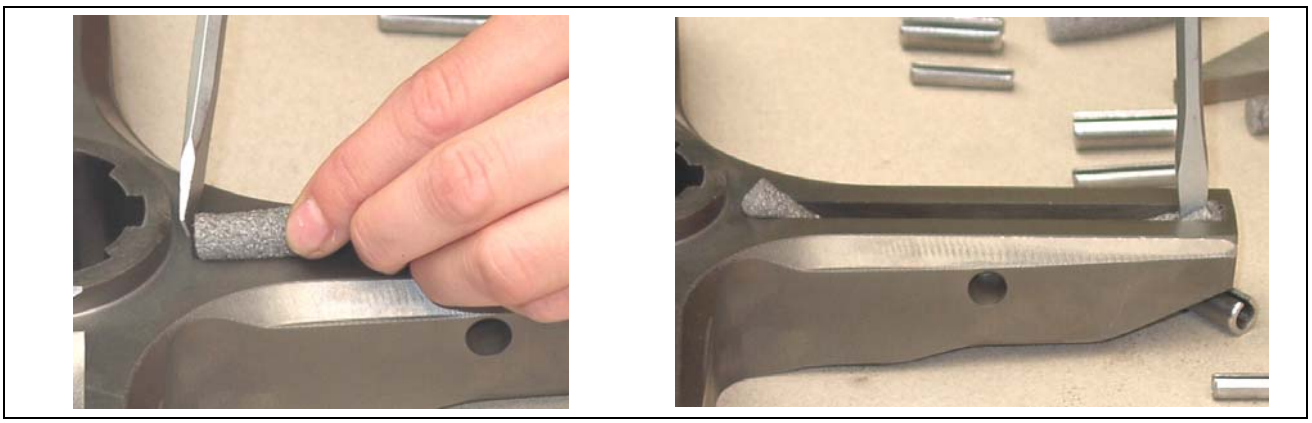

Fig. 11: Preparing the blade rotor for installation of the blades

Assembly instructions: installation tool WKZ.082

Place the blade rotor and blades into the installation tool. Turn the capstan head screw until the holes of the blade and the blade rotor are aligned.

Fig. 12: Installation tool

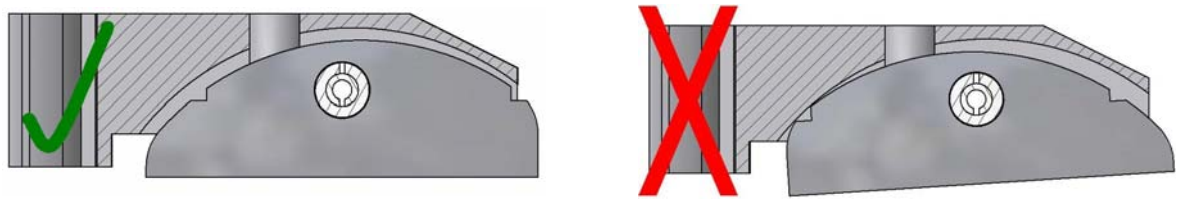

Fig. 13: Correct installation of the blades

Alignment of the spring pins

To avoid premature wear, the slots of the outer spring pins (2) must be aligned so that they face away from the cutting surface and the slots of the inner spring pins (3) must be fitted in the opposing position (see Fig. "Aligning the spring pins").

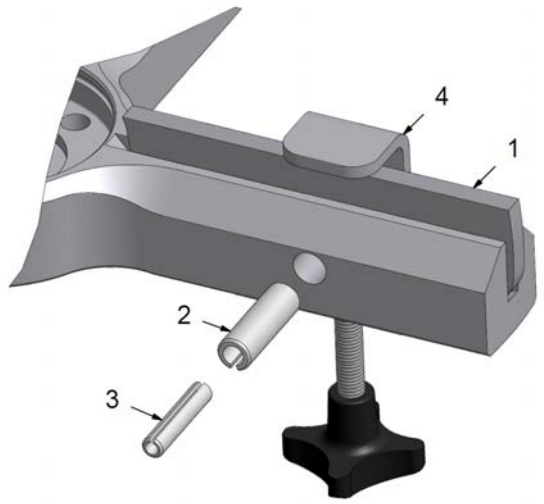

1	Blades
2/3	Spring pin
4	Installation tool

Fig. 14: Alignment of the spring pins

6.3.4 Replacing the cutting screen

(see fig. "Cutting screen assembly")

1. Clean the hex head socket of the tension bolts.
2. Slightly loosen the tension bolts (1) that fix the cutting screen (3) to the outer edge via spring pins (2). Remove the cutting screen (the cutting screen can be turned once).
3. Remove the bushing (16) in the cutting screen support and replace the sealing rings (17) (see Fig. "Replacing the sealing package").
4. Clean the cutting screen (3) and the cutting screen surface.
5. Remove the spring pin (2) and the tension bolt (1) and remove any oil and grease from them.
6. Coat the thread of the tension bolts (1) evenly with anti-seize paste in order to avoid 'seizing' of the stainless steel.
7. Align the hole pattern of the cutting screen (3) to the hole pattern of the cutter head (4).
8. Insert the tension bolt (1) through the spring pins (2) (see Fig. "Cutting screen assembly a")) and and screw it loosely into the cutter head (4) (see Fig. "Cutting screen assembly b")).
9. Check that the cutting screen lies completely on the cutter screen holder. If necessary, close any gaps in the area around the fixing holes of the cutting screen using a plastic hammer.
10. Tighten the tensioning screws.

Tightening torques

Tightening torque for installing the tensioning screw (material A4-80): **80 Nm**

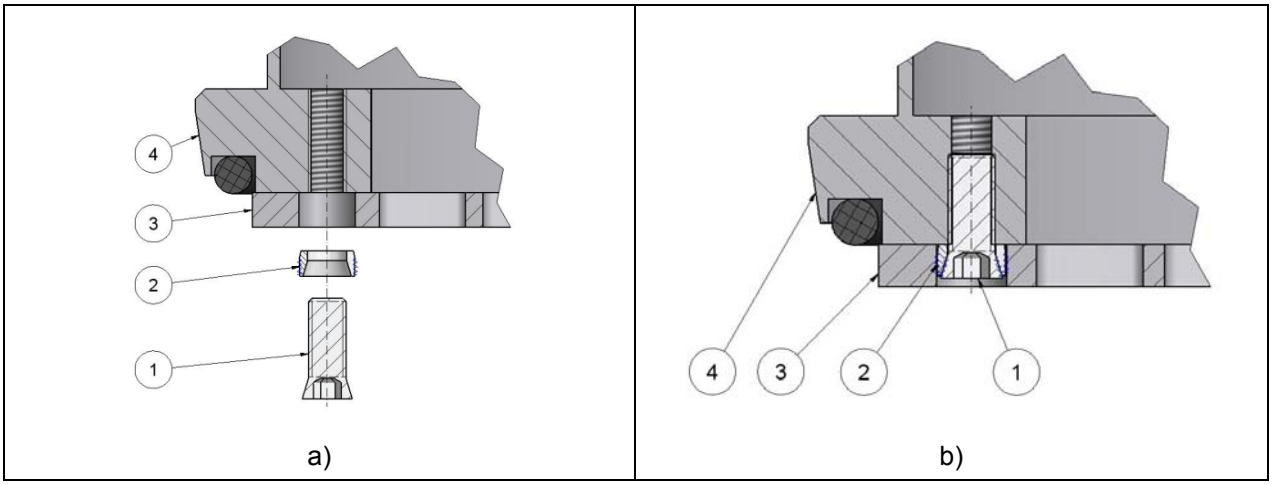

Fig. 15: Cutting screen assembly

1	Tensioning screw	Part-no. GRS.203.EE □(material A4-80 - stainless steel)
2	Spring pin	Part-no. GRS.202.EE □(stainless steel) Part-no. GRS.202 (steel)
3	Cutting screen	
4	Cutter head	

6.3.5 Assembling the blade rotor (RotaCut with manual preload)

1. Assemble the blade rotor and the rotor protection cover with o-ring.
2 Set the preload of the cutting blades with the preload locking nut (see chapter "Checking the blades - Setting the preload").
3. Install the protective hood.

6.3.6 Assembly of the blade rotor (RotaCut with automatic preload)

1. Retighten the release screw (see Fig. "Release screw") on the ACC piston.
2. Reclose the maintenance port of the ACC protective cover.
3. Assemble the blade rotor and the rotor protection cover with o-ring.
4 Set the preload of the cutting blades via the pressure regulator of the pressure transmission unit (see chapter "Checking the blades - Setting the preload").

6.4 Change and check quenching fluid

The quenching fluid must be checked and if required, replaced:

- at start-up
- after 5 operating hours
- then every 100 operating hours
- when cutting blades are changed

Quenching fluid

Slight quenching fluid contamination and a slight rise or fall of the quenching fluid level are determined by the hydrodynamic lubrication film of a mechanical seal and
temperature fluctuations

Procedure:

1. Loosen the valve (**Pos. 2** in Fig. "Changing and checking the quenching fluid").

Level in the quenching fluid tank

Do not completely drain the quenching fluid tank so that air does not get into the buffer chamber.

2. Drain off dirty oil. The level in the quenching fluid tank (**Pos. 1** in Fig. "Changing and checking the quenching fluid") should not go below 1 cm in order to ensure that air does not enter the system. This process must be carried out until clean quenching fluid flows out of the valve. If there is no quenching fluid in the tank while draining off, use an oil can and press in new quenching fluid through the valve from below.
3. Retighten the valve.

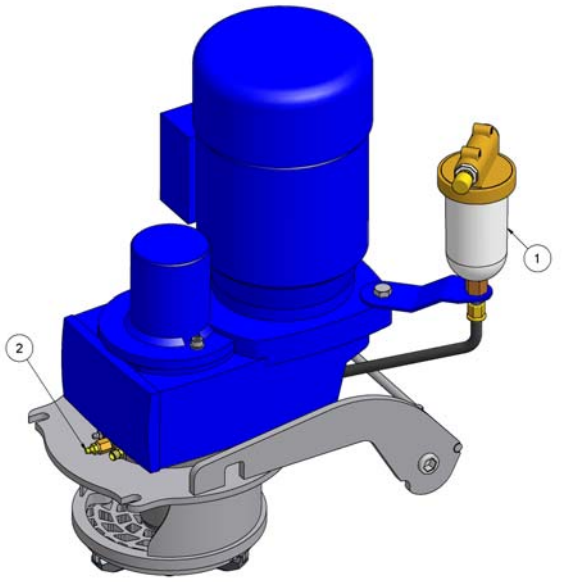

1	Quenching fluid tank
2	Valve

Fig. 16: Changing and checking the quenching fluid

Use oil according to chapter "Oils and lubricants".

6.5 Control foreign matter

The foreign matter separator must be freed from and cleaned of foreign matter at regular intervals.
At the sides of the foreign matter separator there are two cleaning ports. Foreign matter can be removed through these openings.

6.6 Sealing check

The RotaCut RCX-20G is equipped with a mechanical seal. If excessive contamination of oil in the quenching fluid tank is observed, then change the oil (see chapter "Change and control of quenching fluid").
If much oil is used or if the oil level increases quickly, then the mechanical seal must be replaced.

6.7 Checking for wear and corrosion

Particularly abrasive or corrosive pump media can lead to a reduction in wall thickness, particularly in the area of the RotaCut pot. If the wall thickness has been reduced by more than 1 mm, the pot should be replaced.

6.8 Changing of gearbox oil

Gearbox oil

Information about the **gearbox oil grade**, **quantity of gearbox oil** and **maintenance intervals** can be found in the "Operating and maintenance instructions" for the geared motor.

6.9 Oils and lubricants

RotaCut type	Application	Oil or grease part-no.
RCX-20G	Quenching fluid tank for mechanical seal	BSS.006
	Pressure transmission unit ACC oil tank*	BSS.016, alternatively BSS.010
	Lubricating the grease nipples	BSS.022

* If buffer chamber oil should not be allowed to get into the pump medium in a RotaCut **with ACC**, use the alternative oil BSS.010 only!

Part number	**BSS.006**	
Description	EP (Extreme Pressure) gearbox oil	
Trade name (Fuchs)	Titan Gear MP 90	
Properties		**Test acc. to**
SAE class	90 (85W-90)	DIN 51512 or SAE J306c
Kinematic viscosity		DIN 51562
at 40 °C	198 mm²/s	
at 100 °C	17.3 mm²/s	
Flash point	215 °C	DIN ISO 2592
Pour point	-18 °C	DIN ISO 3016
Water hazard class	1	

Part number	**BSS.016**	
Description	Biodegradable, environmentally friendly, multigrade hydraulic oil based on rape seed oil (as per ISO 15308, type HETG)	
Trade name (Fuchs)	Plantohyd 40 N	
Properties		**Test acc. to**
Viscosity index	220	DIN ISO 2909
Kinematic viscosity		DIN 51562-1
at 40 °C	42 mm²/s	
at 100 °C	9.6 mm²/s	
Flash point	300 °C	DIN ISO 2592
Pour point	-36 °C	DIN ISO 3016
Water hazard class	1	

Part number	**BSS.010**	
Description	Medical white oil: water-white, non-fluorescent, tasteless and odourless mixture of hydrocarbons	
Trade name (Fuchs)	White oil W 530 (PH.EUR.)	
Properties		**Test acc. to**
Kinematic viscosity		DIN 51562
at 20 °C	238 mm²/s	
at 40 °C	68 mm²/s	
at 100 °C	8.4 mm²/s	
Flash point	230 °C	DIN ISO 2592
Pour point	-24 °C	DIN ISO 3016
Ambient temperature	-20°C…+40°C	
Water hazard class	1	

Part number	**BSS.022**	
Description	Calcium sulphonate complex grease with a mineral oil basis	
Trade name (Fuchs)	Renolit CXI 2	
Properties		**Test acc. to**
Intrinsic viscosity		DIN 51561-1
at 40 °C	350 mm²/s	
at 100 °C	32.5 mm²/s	
Dropping point	> 270 °C	IP 396
Service temperature	-20 to +160 °C	DIN 51825
Water hazard class	1	

7 Repair

Risk of injury from rotating parts

- Switch off the drive and make sure that the drive cannot be switched on again while the RotaCut is open.
- Also set the main switch to "0".
- Ensure that the installed safety switch (part no. SMD0013) is connected and adjusted in such a way, that the RotaCut ceases operation immediately when the cover is opened, see chap. "Safety device safety switch".

Risk of injury from sharp cutting edges

Wear protective gloves when working in the danger area and be sure to prevent the blade rotor and blades from falling off.
Lock any movable parts, e.g. the blade rotor, before carrying out maintenance and repair work.

7.1 Conversion and spare parts

Modifications or changes to the unit are only permissible after consultation with the manufacturer. Only spare parts approved by the manufacturer or original spare parts can be used. The use of other parts invalidates the guarantee for any resulting damage.

7.2 Change of seal

7.2.1 Remove the preload device (RotaCut with manual preload)

See Fig. "Removing the preload device (RotaCut with manual preload)"

1. Drain the oil from the quenching fluid tank.
2. Remove the protective cover (47.1).
3. Open RotaCut. (Caution! See chapter "Opening the RotaCut").
4. Undo the M10 nut (50.1).
5. Remove the pre-tensioning parts (52.1, 51.1, 54.1).
6. Make sure the blade rotor is safely locked.
7. Undo the slotted nut (55.1).
8. Remove the blade rotor.

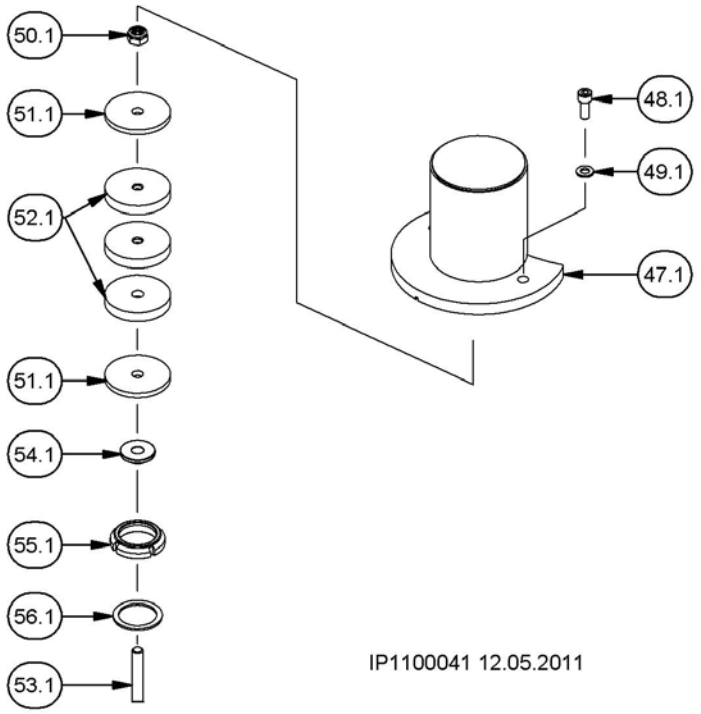

Fig. 17: Remove the preload device for RotaCut with manual preload (extract with pos. no. from the current spare parts list RCX-20G)

7.2.2 Remove the preload device (RotaCut with ACC)

See Fig. "Removing the preload device (RotaCut with ACC)"

1. Drain the oil from the quenching fluid tank.
2. Adjust the ACC preloading pressure to 0 bar.
3. Open RotaCut. (Caution! See chapter "Opening the RotaCut cover")
4. Undo the three hex socket head screws (Pos. 15 in Fig. "Replacing the sealing package") of the rotor hood (Pos. 14 in Fig. "Replacing the sealing package") and unscrew the rotor hood.
5. Make sure the blade rotor (10) is safely locked.
6. Remove the ACC protective cover (140) and unscrew the ACC cylinder (45). The oil hose can remain connected to the ACC unit.
7. Remove the blade rotor (10).

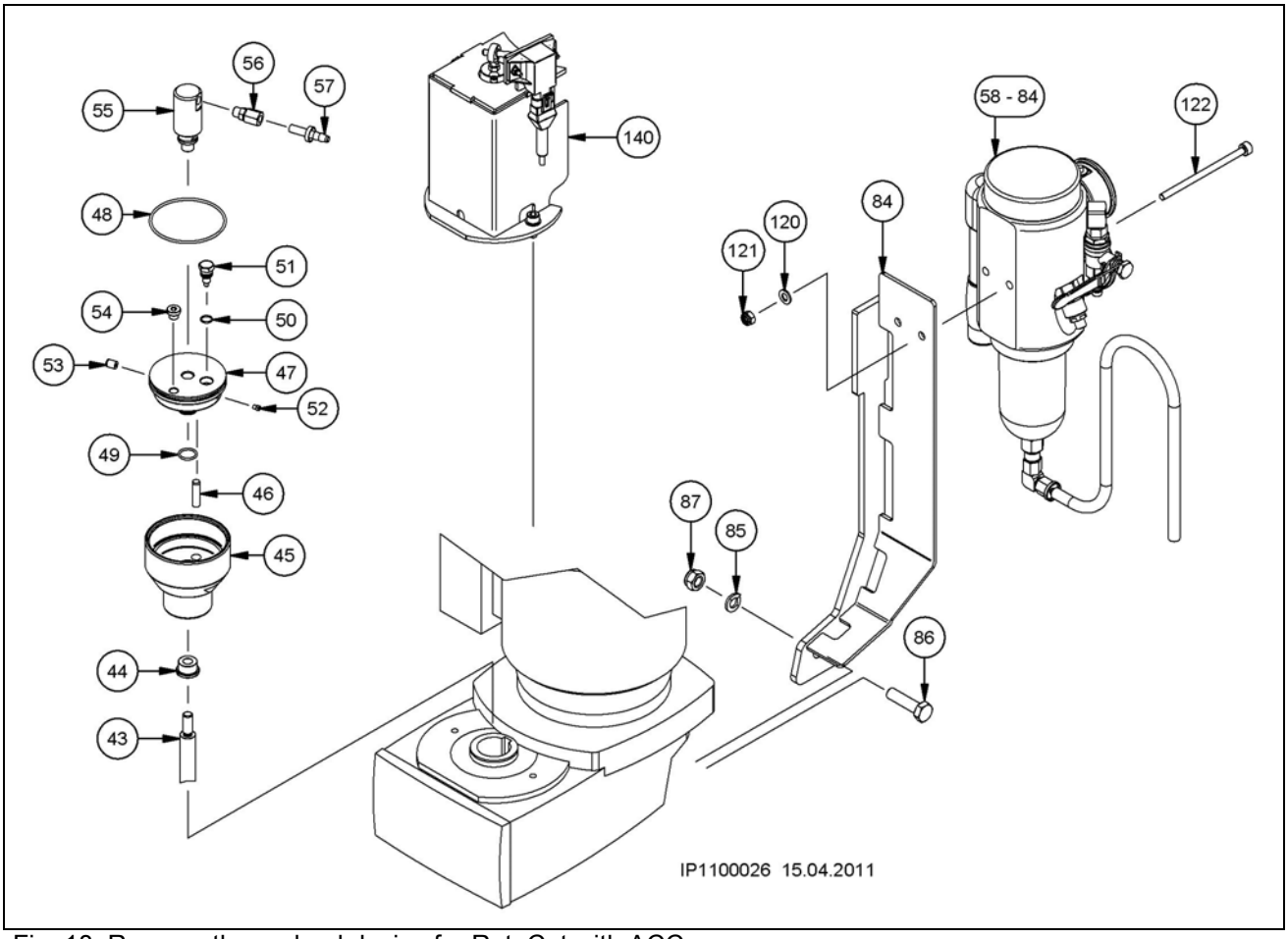

Fig. 18: Remove the preload device for RotaCut with ACC

7.2.3 Sealing package replacement

see Fig. "Replacing the sealing package"

1. Remove the cutting screen (8).
2. Remove the bushing (16) in the cutting screen support (18) and replace the sealing rings (17).
3. Remove the cutting screen support (18).
4. Carefully pull the shaft (19) incl. the sealing package out of the geared motor.
5. Replace the two mechanical seal rings (24) incl. O-ring (5) and all of the O-rings (assembly tool PBA.D006.N1.T2). Use oil to coat all of the O-ring contact surfaces. Be sure to keep the area of the installation and the slip surfaces of the mechanical seals clean.
6. Assemble in the reverse order.

Tightening torques

Tightening torque for the slotted nut or ACC cylinder: 260 Nm

7. If the hose was removed from the rotary lead-through, bleed the air at the bleed screw before installing the ACC cover (only for ACC).
8. After the installation is complete, lubricate the grease nipple (29) till grease comes out again at the check valve (32) (for the lubricant, see Chapter "Oils and lubricants").

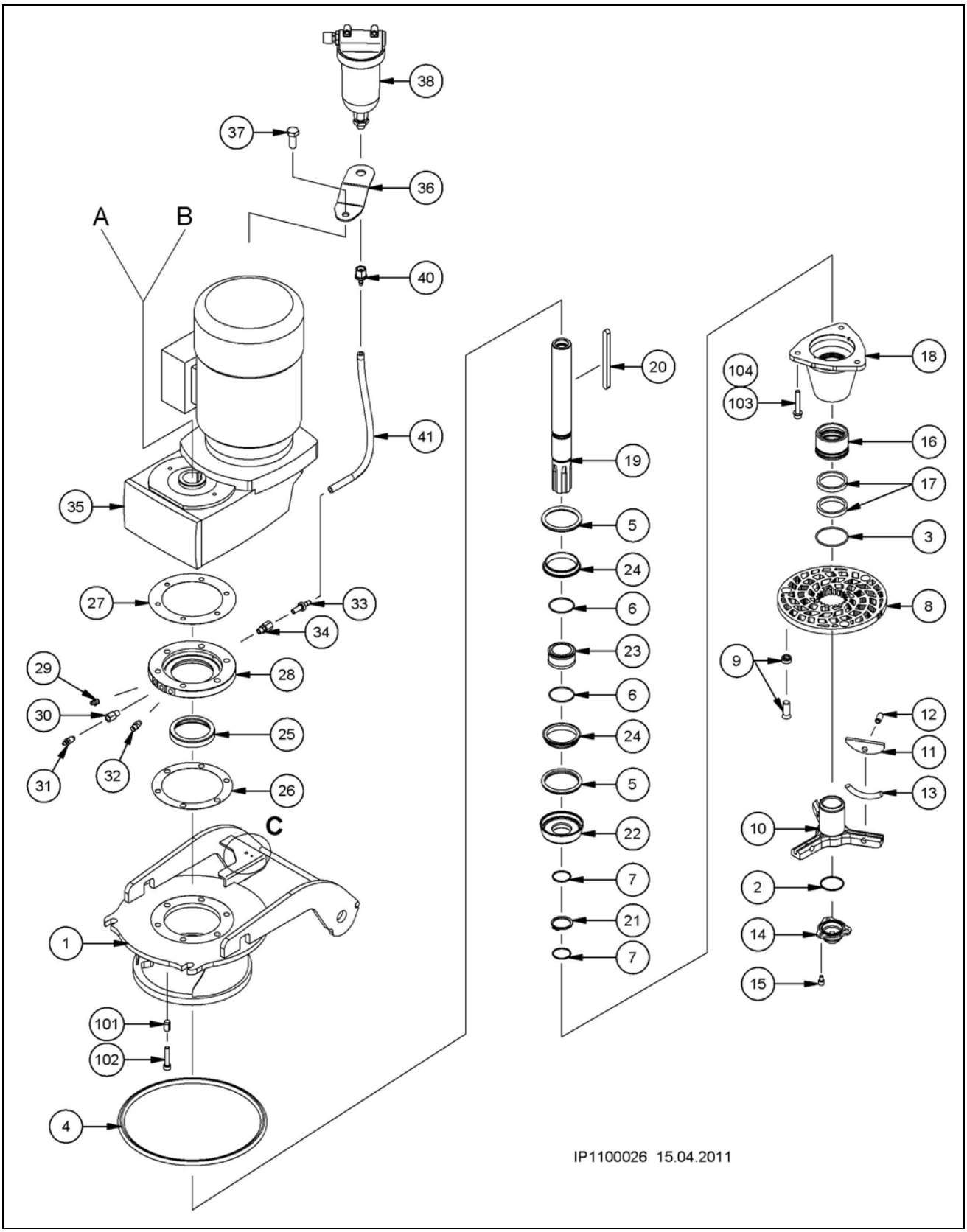

Fig. 19: Sealing package replacement (extract with pos. no. from the current spare parts list RCX-20G)

8 Service Instructions In Tabular Form

	Prior to start-up after longer storage periods/decommissioning, every 2 months	Start-up*	After the first 5 operating hours	After the first 20 operating hours	Every 10 operating hours	Every 100 operating hours	When cutting blades are changed
RotaCut with mechanical seal with SiSiC-SiSiC material combination. In the case of a new RotaCut with this type of seal that is not put into operation immediately, the shaft needs to be rotated (at least one revolution).	X						
Tighten the screws for the base				X			
Check the oil level in the pressure transmission unit		X	X			X	
Control and change quenching fluid		X	X		X		X
Check blades and preload	Carried out according to the medium, see chapt. "Checking the blades - Setting the preload"						

* See chapter "Checklist before start-up"

9 Service Plan

The warranty is invalid if maintenance work has not been performed and documented according to the chapter "Maintenance instructions in tabular form".

Serial number:

Tighten the screws for the base	Check the buffer fluid	Change the buffer fluid	Other			Operating hour meter	Overall delivery rate	Date	Name	Signature

10 Trouble-shooting

RotaCut stops after starting	Suction flow breaks away after start	Flow rate too low	RotaCut blocked	Power consumption too high	Leakage at RotaCut	Extreme pressure and level changes in the buffer chamber	Medium or oil is escaping from the leakage control opening	RotaCut too hot	Motor too hot	Noises & vibration	**Cause**	**Action to be taken**
								X		X	Pump is not priming	Check pump
			X	X	X					X	Pipe causing tension in the RotaCut housing	Check the alignment of the pipe to the RotaCut; if necessary, install a compensator or fasten the pipe more securely
	X									X	Suction pipe clogged	Check the free flow of the pipe system on the suction side
X			X						X	X	Faulty electrical connection	Check electrical equipment
			X								Fault in the hydraulic system	Check the hydraulics
			X								Large foreign objects in medium	Retrofit the control system, which attempts to get rid of the blockage by reversing several times
									X		Motor speed too low during variable frequency drive operation	Install external fan Increase motor speed
								X		X	Oil level in the gearbox is not okay	See chapter "Maintenance"
						X	X				Mechanical seal damage Faulty repair Buffer fluid tank leaking	Change the mechanical seal See chapter "Repair" Check leak-tightness of buffer fluid tank
							X				Seal leaking	Replace the cartridge
X			X	X	X			X	X	X	Operating pressure too high	Reduce the operating pressure
			X					X			No medium in the RotaCut	Check RotaCut for clogging, check pump
							X		X		Geared motor gearbox is leaking	Check oil level of geared motor
X	X	X	X	X					X		Cutting screen clogged	Increase ACC pressure

11 Specifications

	RotaCut RCX-20G Inline			
Max. flow rate [m³/h]	90			
Max. ball diameter, standard (ø mm)	15			
Flow area, standard [cm²]	118			
Inlet and outlet flange		Inlet	Discharge	
	Combi flange	DN 100		PN 16, similar to DIN 2633
	Flange	DN 125		PN 16, similar to EN 1092-1/11
	Combi flange	DN 150	DN 100	PN 16, similar to DIN 2633
Cleaning port	6", DN 150			
Max. internal pressure* [bar]	2			
Tank volume [l]	27			

*- Only pressure in the liquid column for the medium is allowed to be present
*- Pressure may only be present if the tank is completely filled with liquid

RotaCut type designation

The number in the RotaCut type designation indicates the outer diameter of the cutting screen in cm, e.g. RotaCut RCX-**20**: outer diameter = 20 cm.

12 Declaration of Installation

Declaration of installation

for an incomplete machine
according to Machinery Directive 2006/42/EG; annex II B

Manufacturer: Hugo Vogelsang
Maschinenbau GmbH
Holthöge 10-14
D-49632 Essen/Oldb.

We declare that this delivery concerns the following machine which is not complete. The machine must not be put into service until the machinery into which this incomplete machine is incorporated is in conformity with the Machinery Directive 2006/42/EC.

Product: Cutting tool installation kit
for macerating fibrous matter in pumpable fluids

Type of machine: RotaCut®

The technical documents according to annex VII B have been prepared and can if necessary be obtained from: Ms Ilona Ballmann; Hugo Vogelsang Maschinenbau GmbH; D-49632 Essen/Oldb., Germany

All basic health and safety requirements according to Annex I of the above-mentioned directive are applied and observed.

Applied harmonised standards:

DIN EN 349:1993+A1:2008
DIN EN 1037:1996
DIN EN ISO 12100-1:2003
DIN EN ISO 12100-2:2003
DIN EN ISO 13857:2008

Applied national standards and technical specifications:

DIN 4844-1:2002
DIN 4844-2:2001+A1:2004
DIN 4844-3:2003
DIN EN 707:1999
DIN EN 982:1996
DIN EN 62079:2001

49632 Essen, 2011-01-04

H. Vogelsang

Harald Vogelsang (Managing Director)

Stammhaus / Headquarters
Vogelsang Deutschland West

Hugo Vogelsang
Maschinenbau GmbH
D-49632 Essen/Oldb.

+49 54 34 83 0
+49 54 34 83 10
info@vogelsang-gmbh.com
www.vogelsang-gmbh.com

Vogelsang Deutschland Ost

Vogelsang Maschinenbau GmbH
D-06295 Lutherstadt Eisleben

+49 3 47 76 2 05 81
+49 3 47 76 2 05 82
rsb@vogelsang-gmbh.com
www.vogelsang-gmbh.com

Vogelsang USA

Vogelsang USA Ltd.
US-Ravenna, OH 44266

+1 33 02 96 38 20
+1 33 02 96 41 13
sales@vogelsangusa.com
www.vogelsangusa.com

Vogelsang Danmark

Vogelsang A/S
DK-6880 Tarm

+45 97 37 27 77
+45 97 37 30 77
vogelsang@adr.dk
www.vogelsang.info

Vogelsang Great Britain

Vogelsang Ltd.
GB-Crewe, Cheshire CW1 6YY

+44 12 70 21 66 00
+44 12 70 21 66 99
sales@vogelsang.co.uk
www.vogelsang.co.uk

Vogelsang France

Vogelsang France S.A.R.L.
F-26740 Montboucher Sur Jabron

+33 4 75 52 74 50
+33 4 75 52 76 61
info@vogelsang.fr
www.vogelsang.fr

Vogelsang Italia

Vogelsang S.r.l.
IT-26025 Pandino (CR)

+39 03 73 22 03 12
+39 03 73 91 08 7
info@vogelsang-srl.it
www.vogelsang-srl.it

Vogelsang España

Vogelsang S.L.
ES-43800 Valls (Tarragona)

+34 977 60 67 33
+34 977 60 67 33
info@vogelsang.es
www.vogelsang.es

Vogelsang Polska

Vogelsang Sp. z o.o.
PL-52-214 Wroclaw

+48 71 79 89 58 0
+48 71 79 89 58 2
info@vogelsang.pl
www.vogelsang.pl

Vogelsang Romania

Vogelsang Romania SRL
RO-021041 Bucuresti

+40 75 31 05 77 7
+40 31 42 72 75 7
info@vogelsang.ro
www.vogelsang.ro

Vogelsang Malaysia

Vogelsang Malaysia
MY-52200 Kuala Lumpur

+60 1 22 11 42 23
+60 3 62 72 91 87
chan@vogelsang-gmbh.com
www.vogelsang.info

Vogelsang China

Vogelsang Mechanical Engineering (Shanghai) Co., Ltd.
CN-Shanghai 200436

+86 21 61 39 85 01
+86 21 61 39 85 02
sales@vogelsang.com.cn
www.vogelsang.com.cn

Vogelsang Australia

Vogelsang Pty Ltd.
AU-Peakhurst NSW 2210

+61 2 9534 5984
+61 2 533 7349
info@vogelsang.com.au
www.vogelsang.com.au

Vogelsang India

Vogelsang India Pvt. Ltd.
IN-Noida, 201301 (Uttar Pradesh)

+91 120 42 12 901 06
+91 965 09 14 499 (mobile)
+91 120 42 12 908
info@vogelsangindia.com
www.vogelsangindia.com

Vogelsang Česká Republika

Vogelsang CZ s.r.o.
CZ-163 00 Praha 6

+420 277 270 119
+420 277 270 919
info@vogelsang-czech.cz
www.vogelsang-czech.cz

Vogelsang Brasil

Vogelsang Brasil Ltda.
BR-Vinhedo, SP 13280-000

+55 11 6599 9676
ricardo.bordon@vogelsang.com.br
www.vogelsang.com.br

Vogelsang México

Vogelsang De México S de R.L. de C.V.
MX-México City, DF CP 02300

+52 1 55 35 02 38 87
enriqueg@vogelsangusa.com
www.vogelsang.mx